Requirements of the 2000 International Building Code and 2000 International Residential Code on Exterior Insulation and Finish Systems

David A. Bowman, P.E. **Steven R. Thorsell**

ABSTRACT

The recently published 2000 International Building Code *(IBC) and* 2000 International Residential Code *(IRC) contain criteria governing the weather resistance of exterior wall construction. While the majority of these requirements are applicable to exterior wall covering and veneer materials in general, the impact of some of these criteria is of particular note as they apply to exterior insulation and finish systems (EIFS). A number of new issues regarding the design of the exterior envelope incorporating these systems and the evaluation of EIFS have arisen in the wake of the requirements of these codes. These issues are related primarily to changes either being made to existing EIFS in response to the new code requirements or are related to the test procedures contained in the codes.*

The main issues include the following:

- *Testing and evaluation of penetrations and termination details of adhesively applied or mechanically fastened EIFS that do not incorporate a water-resistive barrier (No. 15 felt), flashing, and means of drainage.*
- *Testing and evaluation of systems that employ a fluid-applied (such as trowel, roller, or spray-on) coating intended to be used as an alternative to the code-prescribed water-resistive barrier.*
- *Alternative flashing techniques and materials.*
- *Provision of limited areas of drainage and flashings around the perimeter of penetrations and at terminations (sometimes referred to as "source drainage").*
- *Means for determining compliance with the intent of the term "means of drainage" contained in both the IBC and IRC.*

As a result of these code requirements, some in the EIFS industry are in the process of revising many of their systems in response to the requirements in the IBC and IRC. This paper will discuss the criteria of both the IBC and IRC, specifically the issues posed by the provisions for system testing of the IBC and the progress of the EIFS industry in dealing with those issues.

OVERVIEW OF 2000 IRC, CHAPTER 7

As an overview, the provisions of the *2000 International Residential Code* (IRC) with the most impact on the use of EIFS in an exterior wall design are as follows:

- Section 703.9.1 prescribes the installation of a water-resistive barrier consisting of a minimum of one layer of No. 15 asphalt felt over the building sheathing. This section also requires that a "means for draining water" that enters the system to the exterior be provided.
- Section 703.9.2 prescribes that the installation of flashings is required and contains a reference to Section 703.8 for the locations of that flashing.

The exact text of Sections 703.9.1 and 703.9.2 of the IRC is:

> **R703.9.1 Weather-resistive barrier.** All EIFS shall have a weather-resistive barrier applied between the underlying water-sensitive building components and the exterior insulation, and a means of draining water to the exterior of the veneer. A weather-resistive barrier shall be compliant with ASTM D 226 Type I asphalt-saturated

David Bowman is a managing engineer and **Steven Thorsell** is a supervising architect with the National Evaluation Service (NES).

felt or equivalent, shall be applied horizontally with the upper layer lapped over the lower layer not less than 2 inches (51 mm), and shall have vertical joints lapped not less than 6 inches (152 mm).

R703.9.2 Flashing, general. Flashing of EIFS shall be provided in accordance with the requirements of Section R703.8.

In short, the provisions of the IRC prescribe the use of "drainable-type" EIFS for residential construction. This does not necessarily preclude the use of "barrier" or "face-sealed" type EIFS, since the requirements of Section 703.9.1 are applicable to installations where the underlying construction consists of "water-sensitive building components."

The primary difference between the requirements of the IRC and the *2000 International Building Code* (IBC) are that (a) the IRC specifically addresses requirements specific to EIFS whereas the IBC deals with exterior veneers in general, and (b) the IRC does not contain an exception for the use of systems that do not incorporate a water-resistive barrier, means of drainage, and flashing when qualified by specific testing as is contained in the IBC.

Based on the rather straightforward language in the IRC, the remainder of this paper will deal with the requirements contained in the IBC as it relates to EIFS.

OVERVIEW OF 2000 IBC, CHAPTER 14

As an overview, the provisions of the 2000 IBC with the most impact on exterior wall design are as follows:

- Section 1403.2 prescribes the installation of a water-resistive barrier consisting of a minimum of one layer of No. 15 asphalt felt over the building sheathing. This section also requires that a "means for draining water" that enters the system to the exterior be provided and that the installation of flashings be provided at locations stated in Section 1405.3.
- Section 1405.3 specifies the locations where installation of flashings is required. This section does not contain an exception for the elimination of flashings where a water-resistant sheathing and water-resistant caulking were installed.

TABLE 1
Summary of IBC Code Requirements Based on System Components

Code Requirements	Water-resistive barrier	No water-resistive barrier
Construction documents	Contains sufficient detail to determine code compliance, including: Documentation supporting that the proposed penetrations and opening details maintain the weather resistance of the exterior wall envelope; Manufacturer's installation instructions specifying criteria necessary for the proper installation of the system.	Contains sufficient detail to determine code compliance, including: Documentation supporting that the proposed penetrations and opening details maintain the weather resistance of the exterior wall envelope; Manufacturer's installation instructions specifying criteria necessary for the proper installation of the system and forming the basis for special inspections.
Water-resistive barrier	Required	Not required
Flashing at all penetrations and terminations	Required	Not required System relies on effectiveness and durability of sealant at penetrations and terminations.
Means of draining water to the exterior	Required Provided between the surface of the building substrate and foam plastic.	Not required Foam plastic in direct contact with substrate.
Testing	Not required.	Required for specific penetrations and terminations intended for use
Special inspections	Not required.	Required for all system installations, except where installed over masonry or concrete walls.
Evaluation and Approval basis	Limited to water-resistive barrier, flashings at penetrations, and terminations and means of drainage described in report. Special inspections are not required.	Limited to specific details for which testing was performed and which are included in the report. Special inspections are required and requirements are outlined.

It should be pointed out that the IBC does not prohibit those EIFS that are commonly referred to in the industry as "barrier" or face-sealed systems. These types of systems are typically adhesively attached directly to the building substrate and utilize only sealants to seal between the system and penetrations. Section 1403.2 contains an exception that allows for the use of systems that do not incorporate a water-resistive barrier, flashings at penetrations and terminations, and a means of drainage, where the specific penetrations of the system have been tested for wind-driven rain penetration. The exception specifies the use of the ASTM E 331 test method, a standard laboratory testing method utilizing a static pressure difference, but modifies the test pressure and duration to better represent actual conditions. It should be noted that under this exception, only those system details for which testing is successfully performed are recognized for use with specific EIFS. Additionally, Section 1704.12 stipulates that special inspections are required for these systems. Section 1704.12 requires that the manufacturer's installation instructions specifically address the criteria necessary for the proper installation of the system. These criteria form the basis for the special inspections required to be performed for systems that do not incorporate a water-resistive barrier, flashing at penetrations and terminations, and means of drainage. Special inspections will be discussed later in this paper.

TESTING OF EXTERIOR WALL SYSTEMS WITH PENETRATIONS

As explained above, Chapter 14 of the 2000 IBC contains provisions allowing for the testing of exterior wall assemblies that do not meet the prescriptive requirements of the IBC, such as assemblies that incorporate barrier- or face-sealed-type exterior wall finishes. The testing exception in the 2000 IBC is intended to measure the performance of the system in resisting wind-driven rain incursion when used with the specific penetrations, terminations, and interfaces that represent those intended for use. This would include specific window and door configurations, as well as penetrations such as hose bibbs, dryer vents, louvers, building service pipe or conduit, light fixtures, deck interfaces, wall/eave interfaces, bottom of wall terminations, roof/wall interfaces, and so forth. The test method specified is ASTM E 331 with modifications to the test pressure difference and exposure duration. In this section we will deal with the general issues related to this testing only, and not specific conditions that may arise from the application of this test method.

Exterior walls are generally composed of a combination of components that must function together to provide resistance to weather. The issue of providing weather protection necessitates a holistic approach, namely, determining that the various components of the exterior wall assembly will function together in the intended end-use configuration to protect the structure from the detrimental effects of weather. Recent events have indicated that some wall assemblies are more susceptible to damage from the effects of weather than others, where the components of exterior wall assemblies do not function together. Of specific note are exterior wall assemblies that are unable to accommodate the presence of moisture that may penetrate behind the exterior surface. In instances where moisture within a wall assembly is unable to be redirected back to the exterior or removed by ventilation, it becomes trapped. The prolonged presence of moisture within the wall assembly can then contribute to degradation of the performance of the exterior wall assembly. Chapter 14 of the 2000 IBC contains numerous prescriptive requirements regulating materials used to provide weather resistance, as well as general performance requirements that the exterior wall assembly be durable, afford weather protection, resist structural loads, and, where required, provide a fire resistance rating, be flood-resistant, and prevent the entry of rodents.

The exact text of Section 1403.2 is:

> **1403.2 Weather protection:** Exterior walls shall provide the building with a weather-resistant exterior wall envelope. The exterior wall envelope shall include flashing, as described in Section 1405.3. The exterior wall envelope shall be designed and constructed in such a manner as to prevent the accumulation of water within the wall assembly by providing a water-resistive barrier behind the exterior veneer as described in Section 1404.2 and a means for draining water that enters the assembly to the exterior of the veneer, unless it is determined that penetration of water behind the veneer shall not be detrimental to the building performance. Protection against the condensation in the exterior wall assembly shall be provided in accordance with the International Energy Conservation Code.
>
> Exceptions:
>
> 1. A weather-resistant exterior wall envelope shall not be required over concrete or masonry walls designed in accordance with Chapter 19 and Chapter 1, respectively.
> 2. Compliance with the requirements for a means of drainage, and the requirements of Section 1405.2 and Section 1405.3, shall not be required for an exterior wall envelope that has been demonstrated to resist wind-driven rain through testing of the exterior wall envelope, including joints, penetrations and intersections with dissimilar materials, in accordance with ASTM E 331 under the following conditions:
>
> 2.1 Exterior wall envelope test assemblies shall include at least one opening, one control joint, one wall/eave interface and one wall sill. All tested openings and penetrations shall be representative of the intended end-use configuration.
>
> 2.2 Exterior wall envelope test assemblies shall be at least 4 feet by 8 feet (1219 mm by 2438 mm) in size.
>
> 2.3 Exterior wall envelope assemblies shall be tested at a minimum differential pressure of 6.24 pounds per square foot (0.297 N/m^2).

2.4 Exterior wall envelope assemblies shall be subjected to a minimum test exposure duration of 2 hours.

The exterior wall envelope design shall be considered to resist wind-driven rain where the results of testing indicate that water did not penetrate control joints in the exterior wall envelope, joints at the perimeter of openings penetration, or intersections of terminations with dissimilar materials.

The provisions of Section 1403.2 are applicable to all exterior wall assemblies regardless of the building occupancy classification or construction type. Exterior wall assemblies that incorporate a water-resistive barrier, flashings, and a means of draining moisture to the exterior comply with the prescriptive requirements of this section. Those exterior wall assemblies that incorporate face-sealed exterior wall finishes as a means of providing weather resistance do not, however, comply with the prescriptive requirement and, therefore, must show compliance with the exception to Section 1403.2. One exterior wall finish type that is affected by these requirements is those exterior insulation and finish systems (EIFS) where the sole means of providing weather resistance of the exterior wall assembly at penetrations and terminations is through the use of sealants.

While this paper focuses on EIFS, this discussion is applicable to other exterior wall finishes where the continued weather resistance of penetrations and terminations of the exterior wall assembly is reliant upon a system other than flashing and building paper.

The intent of Section 1403.2 is that the penetration and termination details that are intended for use with the exterior weather covering be tested to determine their ability to resist wind-driven rain. The test method specified is ASTM E 331; however, the test pressure difference is increased from 2.68 pounds per square foot (137 Pa) to 6.24 pounds per square foot (300 Pa) and the test duration is increased from 15 minutes to 2 hours. It must be noted that this test is not intended to test the weather resistance of the penetrating item, but rather the weather resistance of the means of sealing the interface between the termination of the wall finish and the penetrating item. The testing assesses the ability of the joint detail to prevent the passage of moisture behind the exterior wall finish and into the wall assembly.

As with many test methods, the application of this testing requires careful consideration on the part of both the individual commissioning the test and the testing agency. Some have characterized this testing as a "project specific" test, and no doubt this will be true for some special or custom applications. However, in the majority of instances, the testing of the manufacturer's standard details may be sufficient. A critical item to consider in the selection of the details to be tested is in the selection of the actual penetrating materials, since the code requirement is that "all openings and penetrations tested shall be representative of the intended end-use configuration." In other words, the testing of one type of window with a specific profile and construction does not extend to other window types with different profiles and construction.

Reports of testing of penetrations need to contain specific descriptive information about the test subjects. Section 12 of ASTM E 331 requires, at a minimum, that the following information be reported:

12. Report

12.1 Report the following information:

12.1.1 Date of test and date of report.

12.1.2 Identification of the specimen (manufacturer, source of supply, dimensions, model, type, materials, and other pertinent information).

12.1.3 Detailed drawings of the specimen that provide a description of the physical characteristics including dimensioned section profiles, sash or door dimensions and arrangements, framing location, panel arrangements, installation and spacing of anchorage, weatherstripping, locking arrangements, hardware, sealant glazing details, and any other pertinent construction details. Any modifications made on the specimen to obtain the reported values shall be noted on the drawings.

12.1.4 For window and door components, a description of the locking and operating mechanism.

12.1.5 Identification of the glass thickness and type, and method of glazing.

12.1.6 Type or types of weatherstrip.

12.1.7 A statement of tabulation of pressure difference or differences exerted across the specimen and water application rates during the test.

12.1.8 A record of all points of water penetration on the indoor face of the test specimen, and of water penetration as defined in 3.2.3.

12.1.9 When the tests are made to check the conformity of the specimen to a particular specification, an identification or description of that specification shall be included.

12.1.10 A statement that the test or tests were conducted in accordance with this test method, or a complete description of any deviations from this test method.

12.2 If several identical specimens of a component are tested, the results for all specimens shall be reported, each specimen being properly identified, particularly with respect to distinguishing features or differing adjustments. A separate drawing for each specimen shall not be required if all differences between them are noted on the drawings provided.

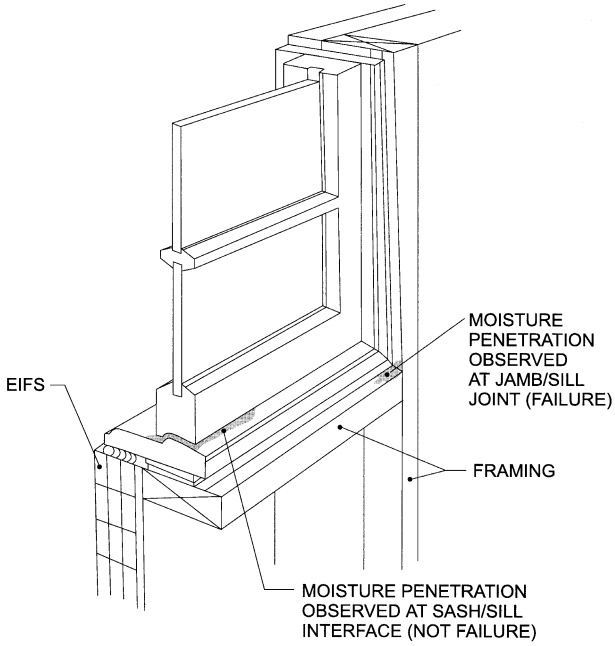

Figure 1

Given these requirements, particular attention should be paid to reporting the following items:

- Detailed description of each penetrating item(s) tested, such as
    - manufacturer,
    - material type,
    - salient construction details of the item,
    - drawing of the joint construction, and
    - profile of penetration and termination of wall finish;
- Detailed description of joints, including
    - width, depth, and type of backer material,
    - sealant specification, and
    - primer type (where used);
- Detailed description of any methods used to modify or seal the penetrating item against water penetration, such as application of sealant to joints of a window frame.

In instances where the manufacturer desires to extend the results achieved by testing to details that were not tested, an engineering analysis must be performed.

To establish a basis for equivalence, some of the criteria to take into account in the analysis include

- profile of the penetrating item,
- construction of the penetrating items,
- sealant joint configuration (including sealant width and depth, sealant backing material and depth, and sealant contact depth).

An example of an analysis is an exterior wall system tested with a penetration consisting of a one inch (25 mm) diameter, Schedule 40 PVC pipe, with a 1/2 inch (12.7 mm) annular space, one-component low-modulus silicone sealant, and properly sized closed-cell backer rod. To establish whether this detail would be appropriate for use with a 6 in. (152 mm) diameter PVC pipe would require verification that the joint configuration and sealant materials proposed for use are identical to those of the details tested.

A more involved example is to take the results of testing of a specific window type, such as a wood casement window, and apply those results to a vinyl casement window with the different frame profile. Among the variables to be taken into consideration and addressed by the analysis are

- similarities and differences in frame profile, as they affect the configuration of the sealant joint and backing material;
- similarities and differences in frame construction, such as methods of joining the jambs to head and sill and manufacturing tolerances;
- sealant joint configuration tested versus that permissible by the profile of the proposed frame;
- properties of the sealant tested when used with the vinyl frame material, such as evidence of adhesion and cohesion (ASTM C 719) and adhesion-in-peel (ASTM C 794).

To determine compliance with the exception to Section 1403.2, there must be no visible evidence of moisture in the wall assembly. This determination is to be made through visual observation and disassembly if the test specimen is not mandated. Construction of the test specimen should be done in such a manner that the unexposed face of the assembly facilitates visual observation during and after the test exposure. It is important to note that observance of water penetration through the penetrating item does not necessarily constitute a failure. As an example, if during the testing of a door and frame assembly, leakage is observed at the door knob location, this would not be considered as a failure since the purpose of the testing is to evaluate the method used to seal the interface of the wall finish/door frame. Another example is a wood, double-hung window as illustrated in Figure 1. Assume that water leakage is observed at the lower sash/sill interface as well as at the lower corner where the jamb and sill are joined. Leakage at the sash interface results in water on the back side of the window, while the leakage at the frame joint results in wetting of the jamb stud and rear face of the sheathing. The leakage at the sash interface would not be considered as a failure; however, the leakage at the frame joint would be. The reason is that the method provided to seal the interface between the penetrating item and the wall finish does not prevent the passage of moisture into the wall assembly.

To assist in minimizing the potential for leaks at non-interface locations, consideration may be given to sealing these locations. Caution, however, must be exercised when this is done. If we return to the example of the double-hung

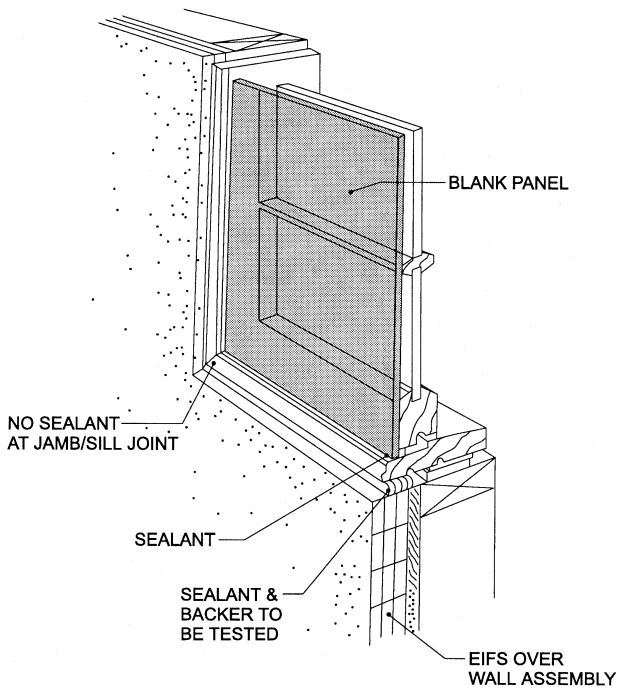

Figure 2

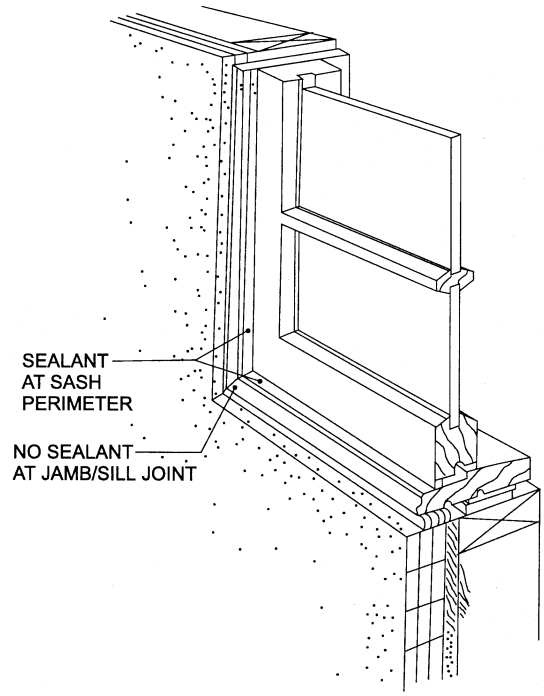

Figure 3

wood window, it may be feasible to install a blank panel over the operable sash, as illustrated in Figure 2, or to seal the perimeter of the sashes, as illustrated in Figure 3. Where the panel is used, the perimeter of the panel may be sealed to maintain the weathertightness.

Considering that the purpose of the test is not to determine the weather resistance of the sash, either of these methods would most likely be acceptable. However, if the blank is placed over the face of the jambs, as illustrated in Figure 4, or sealant is installed at the frame joints, this would not be considered as acceptable since it does not allow for the effectiveness of the means of sealing joint in the exterior wall finish to prevent moisture penetration. If the test specimen were sealed in this manner, it would result in a specific installation limitation that would require the application of sealant to joints of the window frame in the field.

Finally, the construction documents that accompany the application for permit must contain sufficient details of the wall assembly to allow for determination of compliance with the requirements of Chapter 14. Additionally, supporting documentation that the penetration and opening details proposed for construction maintain the weather resistance of the exterior wall assembly must be provided. This may be in the form of details of the means of sealing the joints or of flashing the perimeter of the penetration.

As a point of information, an ASTM Subcommittee Task Group (E06.58.04) is currently working to develop a standard practice for the use of ASTM E 331 for testing penetrations in EIFS assemblies. The practice standard is intended to provide users with guidance and additional information specific to the

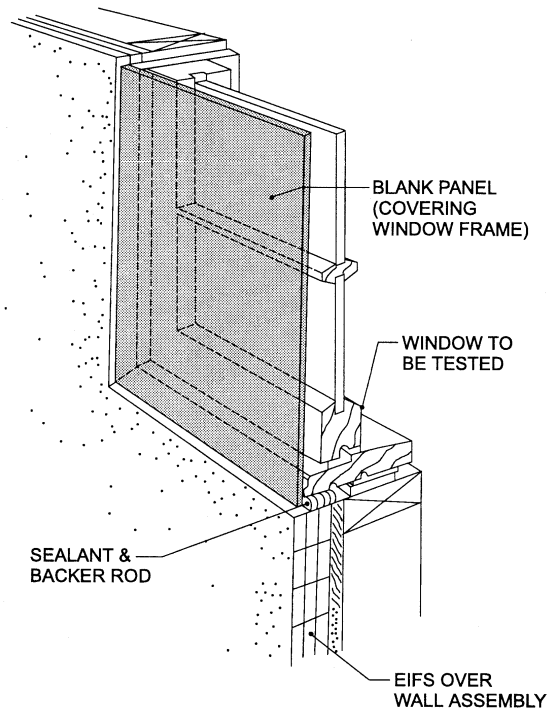

Figure 4

testing of EIFS penetrations. This committee is discussing many of the issues presented here.

On a related note, the exterior wall finish system (and penetrations) are also required to undergo special inspections as required by Section 1704.12.

Within the context of the code, special inspections are a requirement for the use of outside experts to perform inspections throughout the course of the work specified. These experts, or special inspectors, subject to the approval of the code official, are hired by the owner. The nature of these inspections that makes them "special" is that an independent agent has to be on hand at the time of construction to provide verification that the materials and methods of construction comply with the requirements of the code. Due to the nature of the care required in the installation of EIFS, and in particular at terminations and the interface of penetrations, the code mandates that special inspections be provided.

These inspections are to be provided for by the permit applicant, with the qualifications of the special inspector submitted to the code official for approval. The inspections are to address the aspects of installation stipulated in Section 1704.12.

> **1704.12 Exterior insulation and finish systems (EIFS):** Special inspections shall be required for all EIFS applications.
>
> **Exceptions:**
>
> *1.* Special inspections shall not be required for EIFS applications installed over a water-resistive barrier with a means of draining moisture to the exterior.
>
> 1. Special inspections shall not be required for EIFS applications installed over masonry or concrete walls.

The inspection reports prepared by the special inspector are required by Section 1704.12 to be submitted to both the code official and the registered design professional in responsible charge, prior to the completion of the work. In the event of a violation or discrepancy, the special inspector is required to notify the contractor for correction. Should the contractor not correct the violation, the special inspector is required to notify the code official and the registered design professional prior to the completion of that phase of work. A final report must be submitted prior to the issuance of the certificate of occupancy.

Other Alternatives

The provisions of the IBC give another possible approach to alternatives, and that is contained in the text of Section 104.11, which reads as follows:

> **104.11 Alternative materials, design and methods of construction and equipment.** The provisions of this code are not intended to prevent the installation of any material or to prohibit any design or method of construction not specifically prescribed by this code provided that any such alternative has been approved. An alternative material, design or method of construction shall be approved where the building official finds that the proposed design is satisfactory and complies with the intent of the provisions of this code, and that the material, method or work offered is, for the purpose intended, at least the equivalent of that prescribed in this code in quality, strength, effectiveness, fire resistance, durability and safety.

In the recent past, some innovations in the exterior wall industry include alternatives that rely upon Section 104.11 as the IBC basis for approval of the product. In the next section, we will discuss how we at NES view the specific technical issues surrounding these products.

No. 15 Felt or Equal, a Simple Concept?

Since the IBC requires the use of No. 15 building paper behind exterior wall veneers in most applications, one may question whether this new requirement effectively prohibits the use of materials such as house wraps. The answer to that question is "No." Section 104.11 of the IBC still allows for the use of materials other than those prescribed in the code when evidence is presented to demonstrate that the proposed alternative is at least as effective as the code-prescribed material.

In the case of house wraps, this means showing that the material proposed for use is as effective in protecting the underlying building substrate as the protection provided by the application of one layer of No. 15 felt. The key is to first establish what are the performance characteristics or properties of a water-resistive barrier consisting of No. 15 felt.

Section 1404.2 establishes that the building paper must comply with ASTM D 226 for Type I paper. A review of this standard indicates that the criteria are related to the physical composition of asphalt-saturated felt, and apart from tensile and tear strength characteristics, the standard does not contain any performance criteria. Since these few criteria do not address all of the properties needed to be evaluated, the next step is to look at the purpose of No. 15 felt installed behind exterior wall veneers, which is to prevent moisture that may get behind the exterior veneer from reaching the building substrate. One property of asphalt felt is that it possess the ability to shed water, as well as to provide limited resistance to the absorption or passage of water. Finally, No. 15 felt allows a certain amount of water vapor transmission to occur. These abilities are not characterized in ASTM D 226, so another means is needed to quantify these characteristics.

- **Water resistance (limited hydrostatic head):** The material that is proposed as an alternative to No. 15 felt must be able to resist the passage of free water at a level equal to that of the felt. There are no test methods currently available that have been developed specifically for measuring this property. However, there are some test methods that, while not originally developed for measuring the hydrostatic resistance of building paper, can be adapted to this use. A review of those standards that are available yields the following standards:
    - Federal Test Method Standard No. 191A-5516;
    - AATCC Method 127 (commonly known as the Suter method)
    - CCMC Technical Guide "Sheathing, Membrane, Breather-Type," MasterFormat No. 07193

The similarity between all of these tests is that they test water permeability of the test subject under a low hydrostatic pressure and thereby provide a measure of the specimen's ability to resist the passage of water. In the absence of a prescriptive requirement for the minimum performance of No. 15 felt when tested in accordance with one of these test methods, it becomes necessary to do a side-by-side test of each material after aging (i.e., No. 15 felt and the proposed alternative material). The pass/fail criteria is established by the "benchmark" performance established by the testing of the No. 15 felt. Therefore, the proposed alternative material must achieve the same or better resistance.

- **Surface-burning characteristics:** The material must also exhibit a flame spread index of 75 or less and a smoke-developed index of 450 or less when tested in accordance with ASTM E 84 to satisfy the criteria of Section 723.3.
- **Water vapor transmission:** Since the *2000 International Energy Conservation Code* (referenced by Chapter 14 of the 2000 IBC) limits the use of materials with a vapor transmission of 1.0 perm or less (vapor retarder) to the warm-in-winter side of a wall, the proposed alternative must have a vapor transmission rate, as determined by ASTM E 96, of greater than 1.0 perm for it to be used on the exterior of the wall assembly.

Employing these criteria in the evaluation process, the determination of whether the proposed material is equivalent in performance to that of No. 15 felt can be made.

Lately, there has been an emergence of non-sheet-type materials that are intended for use as an alternative to No. 15 felt, and the evaluation of these non-sheet-type materials poses additional challenges. Materials such as fluid-applied barriers, which are typically brush, trowel, or spray-applied to the substrate surface, become integral with that substrate. Thus, in addition to evidence that the material has equivalent physical characteristics to No. 15 felt, such as tear strength, pliability, resistance to water penetration (limited hydrostatic head), and flame spread in the same manner listed above, there are three additional key areas that need to be evaluated for these types of materials.

1. *Evaluation of fluid-applied material as an alternative to ASTM D226, Type I, No. 15 building paper.*

The first key difference is that the fluid-applied material becomes integral with substrate instead of being separate. This type of application will result in the stresses that the wall construction will be subjected to being transmitted to the membrane. To demonstrate equivalence with the protection provided by No. 15 felt, evidence that the fluid-applied material can resist movement of substrate over the intended life of the product must be provided. This includes racking, shear, and transverse loads imposed on the substrate, as well as the forces resulting from thermal expansion and contraction. This is particularly critical at locations where joints and changes in plane occur in the substrate. Data to evaluate this performance should consist of wind-driven rain resistance testing of aged samples installed over the substrate(s) intended for use and that have been exposed to various loading (racking, transverse, and shear). Ultimately the data must show that the aged samples do not become degraded through the combination of repeated movement and aging and thereby allow moisture to penetrate. The testing should consist of a period of accelerated aging representing a given period of time, such as one year, followed by physical testing, consisting of racking testing and water spray. The cycle should then be repeated until the intended life cycle of the material is reached. The intended life of the product should be equal to or greater than the intended life of the substrate material. By these data, the anticipated in-place performance can be determined.

2. *Evaluation of the surface-applied flashing details used with the fluid-applied membrane.*

To demonstrate equivalence with the protection provided by the flashing details used with No. 15 felt, evidence must be provided that the flashing details of systems using fluid-applied material are equivalent in performance to traditional (overlapped) flashing details. Data must address durability issues similarly to item 1 above, as well as provide evidence that the material will successfully resist the penetration of moisture behind the surface-applied flashing over the intended life of the product, in the same fashion as No. 15 felt lapped over the top of flashing.

3. *Evaluation of the methods to be used to verify that the material is installed uniformly in the thickness necessary.*

Improper application can lead to insufficient coverage that could allow moisture to reach the building substrate. Conversely, an application that is too thick may lead to a decrease in vapor transmission, which could result in moisture being trapped in the wall. Based on these concerns, the use of these types of materials can justify the requirement for special inspections of the application in accordance with Section 1705.14 of the 2000 IBC.

In summary, the evaluation of the use of fluid-applied membranes as an alternative to No. 15 felt poses some significant challenges.

Alternative Flashing Techniques and Materials

One of the three basic requirements of the code is that flashings be provided at all terminations and penetrations of the EIFS. The purpose of the flashing is twofold. First, it prevents water from penetrating into the wall assembly at joint and similar locations. Second, it provides a location and means for directing water back to the exterior. Flashings are required to be of an "approved corrosion-resistant" material. Some common types of flashing materials that have been used over time are sheet metal (including copper; galvanized, zinc-coated, or stainless steel; aluminum; plastic (including polyvinyl chloride or neoprene); and composite sheet materials. The actual flashing material selected for use must be suited to the wall covering that it is being installed in conjunction with. For example, the use of uncoated aluminum with masonry is

not ideally suited since the caustic alkalies in fresh mortar attack aluminum. Some sheet membranes may be subject to degradation from UV exposure and should also be avoided. Another type of material that has seen use over the past several years is self-adhesive, rubberized composite sheeting (often referred to as "peel and stick" flashing). Many of these products evolved from sheet membrane materials used for waterproofing and roofing applications. The flexible and self-adhesive nature of these materials lends to their use for flashing irregular or circular penetrations that are difficult to flash with rigid flashing materials. In addition to the selection of the flashing material to be used to suit the particular application, it is equally important that the flashing be detailed properly. To be effective in shedding water to the exterior, concealed flashings need to extend beyond the exterior wall surface and be provided with a drip edge along the outer edge. This will minimize the potential for water that drains off the flashing from re-entering the wall through capillary action at the point below the flashing. The water-resistive barrier needs to be lapped over the vertical leg of the flashing that is attached to the wall substrate so that water shedding will occur and minimize the potential for water infiltrating behind the flashing.

The issue of using EIFS basecoat and mesh (without the finish) must be addressed. The term for this type of system detail is known as "edge wrapping" and is characterized by the base coat (and mesh) being brought around the edge of the foam plastic board and being applied to the edge of the substrate opening. The base coat must bond to the edge of the substrate at the opening, which can include the exposed edge of the sheathing and the exposed vertical and horizontal surfaces of the framing members. One concern with the use of this detail as an alternative flashing is that once the basecoat bonds to the framing and sheathing, it will now be subjected to the stresses that will be imposed upon the framing and sheathing. These include both racking and lateral forces. It may seem that these forces are trivial and don't merit consideration; however, these are forces that will occur over the entire life of the structure, every time the wind blows. If there is evidence that the basecoat cannot resist these forces over a prolonged period of time without cracking, then this detail cannot be considered as a viable flashing method. Another concern is related to the ability of the basecoat to bridge gaps. In actual construction, the edge of the sheathing is most often not smooth and flush with the surface of the framing at openings, as typically shown in construction detail. Therefore, the basecoat will need to bridge the gap between the edge of the foam plastic boards and the framing of the opening, at those locations where the sheathing is not in the same plane. It has been recognized in the industry that when gaps exist between the ends of foam plastic boards, the basecoat is unsupported and can result in cracking over time. This occurs from flexing of the lamina as it expands and contracts, which can result in overstressing and subsequent cracking. If cracking were to occur where the basecoat is being used as concealed flashing, this could result in moisture infiltrating through into the wall assembly.

Provision for Limited Areas of Drainage at Flashings

Sometimes referred to as "source drainage" within the industry, these types of EIFS differ from the face-sealed systems that have been traditionally used in the detailing at penetrations and terminations. The main system installation may be either adhesively applied or mechanically attached in direct contact with the substrate. At penetrations and terminations of the systems, however, flashing is provided and a means of drainage (such as grooved foam or a drainage medium) is provided. This is in contrast to the standard details where the only means of sealing the joint against moisture penetration is through the use of sealant and backer rod. Attention must be given to the flashing installation, and verification of the means for drainage must be made. Also, where sealants are provided to further seal these joints, weep tubes or other means must be installed at the flashing locations to allow moisture to drain back to the exterior and prevent it from becoming trapped within the system. Because testing can be performed to establish the weather resistance of the main field of the EIFS and field studies have indicated that water penetration does not occur within the field of a properly installed EIFS, the requirement for means of drainage and a water-resistive barrier (No. 15 felt) may be omitted within the field of the EIFS, provided that the localized flashing and drainage provided at ALL penetrations and terminations will prevent moisture infiltration at these points from migrating into the wall assembly.

Means for Determining Compliance with the Intent of the Term "Means of Drainage" in Section 1404.3

The intent behind the requirement for means of drainage is that sufficient discontinuities are provided between the rear face of the exterior veneer material and the surface of the building paper-covered substrate. This can take many forms, such as vertical furring strips, the use of drainage mats or geosynthetic textile materials, grooves in the rear face of the cladding, or similar means. The key element is that the veneer must not be in direct, substantial contact with the substrate. Many commonly used exterior veneer materials already comply with the intent of this requirement. Some examples are portland cement stucco installed over furred lath, wood lap siding, aluminum, vinyl and steel siding, and masonry veneer. For EIFS, where the means of drainage (such as the use of grooved foam, drainage mats, or furring strips) is not readily apparent, additional evidence must be provided. At least two test methods have been developed by various segments of the industry that attempt to establish the drainage performance of EIFS. It must be noted that these test methods contain a minimum performance value for a system to be considered as providing an effective drainage capability. However, the minimum values that are contained in these test methods are somewhat arbitrary in that there is no empirical data to establish what constitutes an acceptable minimum drainage value. It should be pointed out that EIFS, which consist of flat foam boards applied in direct contact with the building paper-covered substrate, do NOT meet this requirement and cannot

be considered to comply with the requirements of the IBC code for possessing a means of drainage.

SUMMARY

While the provisions of the Code are seemingly confusing and complex, the phrase, *"it ain't rocket science"* comes to mind. The Code calls for a singular performance criteria: *Protect the building from damage or decay due to moisture incursion*. The *prescriptive method* is to require some redundancy—a water barrier behind the exterior veneer and a path for water to leave if it gets behind the exterior veneer. Alternatives to this can be used based upon the performance testing of full-scale wall assemblies (i.e., systems) with representative openings in the walls. Further, alternatives to the specific materials and components prescribed by the code are possible, given the provisions for alternative materials and methods as stated in Section 104.11 of the *International Building Code* and Section R104.11 of the *International Residential Code*.

REFERENCES

ICC. 2000. *2000 International Building Code*. Falls Church, Va.: International Code Council.

ICC. 2000. *2000 International Residential Code*. Falls Church, Va.: International Code Council.

ASTM D 226-97a, *Specification for Asphalt-Saturated Organic Felt Used in Roofing and Waterproofing*. American Society for Testing and Materials, West Conshohocken, PA.

ASTM E 331-93, *Standard Test Method for Water Penetration of Exterior Windows, Curtain Walls, Doors by Uniform Static Air Pressure Difference*. West Conshohocken, Pa.: American Society for Testing and Materials.

ASTM C 719, *Standard Test Method for Adhesion and Cohesion of Elastomeric Joint Sealants Under Cyclic Movement (Hockman Cycle)*. West Conshohocken, Pa.: American Society for Testing and Materials.

ASTM C 794, *Standard Test Method for Adhesion-in-Peel of Elastomeric Joint Sealants*. West Conshohocken, Pa.: American Society for Testing and Materials.

Federal Test Method Standard No. 191A-5516, *Water Resistance of Cloth; Water Permeability, Hydrostatic Pressure Method*.

AATCC Method 127-1985, *Water Resistance: Hydrostatic Pressure Test*. Research Triangle Park, N.C.: American Association of Textile Chemists and Colorists.

CCMC Technical Guide, Sheathing, Membrane, Breather-Type, MasterFormat No. 07913. Ottawa, Ontario, Canada: Canadian Construction Materials Centre.

ASTM E 84-98, *Standard Test Method for Surface-Burning Characteristics of Building Materials*. West Conshohocken, Pa.: American Society for Testing and Materials.

ICC. 2000. *2000 International Energy Conservation Code*. Falls Church, Va.: International Code Council.

ASTM E 96-95, *Standard Test Method for Water Vapor Transmission of Materials*. West Conshohocken, Pa.: American Society for Testing and Materials.